RFID-based self-service baggage-counter with base-36 security key algorithm

[1]Jahdiel S. Villosa, [1]John A. Bacus, [1]Jeffrey G. Garrido, [1]King Roland N. Geyrozaga, [2*]Rodrigo S. Pangantihon Jr.
[1,2]Computer Engineering Department, College of Engineering Education,
University of Mindanao, Davao City, Philippines
Email: rodrigo_pangantihon@umindanao.edu.ph

Date received: March 30, 2017
Date accepted: May 29, 2017
Date published: December 16, 2017

ABSTRACT

Being considered as the largest library in Southern Mindanao, there is a need to simplify and automate services in the library of the University of Mindanao. In this study, the self-service baggage counter system was aimed to automate the manual process of baggage counters and ensure security and convenience of the library users. The system utilized RFID to secure access to the system, thermal printer that produces receipt containing the generated password for claiming, barcode reader which scans the receipt's security code and solenoid locks located in each storage to provide safekeeping and locking mechanism. After conducting functionality test, the average time for depositing and claiming transactions is 34.24 seconds and 36.42 seconds, respectively, which indicates significant improvement in operations on library baggage services. Further study is encouraged to use new technologies that may simplify and extend the scope of the current system.

Keywords: *Baggage Counter, RFID, Security Key Algorithm, Base-36, Philippines.*

INTRODUCTION

It is a general library rule that all users and visitors should leave their bags at the baggage counter before entering the library circulation area. Baggage refers to the bags, suitcases and personal belongings of the clients. With this in mind, handling baggage of clientele in the library is very important, thus it must be secured from any unwanted incidents.

In Region 11, Philippines, the University of Mindanao is known to have one of the largest libraries. Its total floor area is about 6,174.48 sq. m. and it has a seating capacity of 1,640. The Learning and Information Center (LIC) also caters about 25,000 students. This does not include yet the population of professors who also use the library facilities.

The Learning and Information Center (LIC) of the University of Mindanao and other commercial establishments employ baggage counters for top two reasons: security and convenience of the clients. In such places where multiple customers come and go, the need to secure baggage from possible loss must be taken into consideration. Today's baggage counters have personnel in-charge of receiving items to be deposited and releasing the same to the client. Time, being an important factor in every system, must be minimized to be able to accommodate most of its customers.

The researchers have observed that the baggage manual system at UM-LIC is not efficient enough in serving clients who are availing of library services. Thus, the researchers proposed to improve the traditional system by using available technologies to automate the process of depositing and claiming the baggage in the library. This research aimed to develop an automated self-service baggage counter system based on the specifications of the Learning and Information Center of the University of Mindanao. It specifically aimed to achieve the following: to develop a system which will automate the processes of depositing and claiming of baggage and record time logging; to design and implement an

algorithm for generating password to optimize security mechanism; and to perform functionality test of the system.

METHODS

A. Conceptual Framework

The input-process-output of the conceptual framework is shown in Figure 1. The system will detect and read the information from the tag/card and perform appropriate verification processes. Desired output includes self-service transactions on depositing and claiming of baggage and printing of security key receipt for the user.

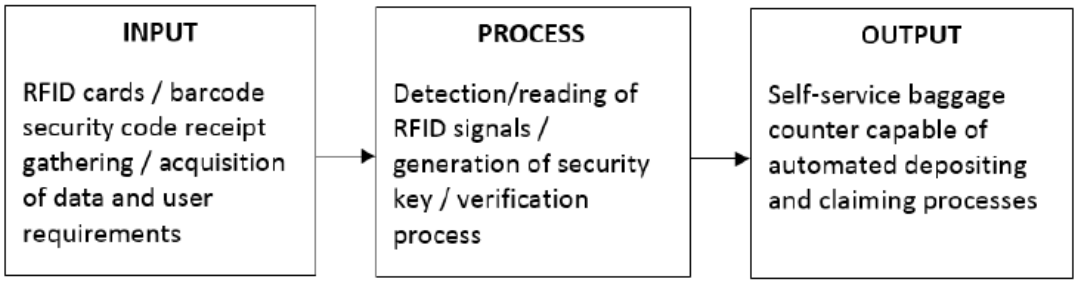

Fig. 1 Conceptual Framework

B. Block Diagram

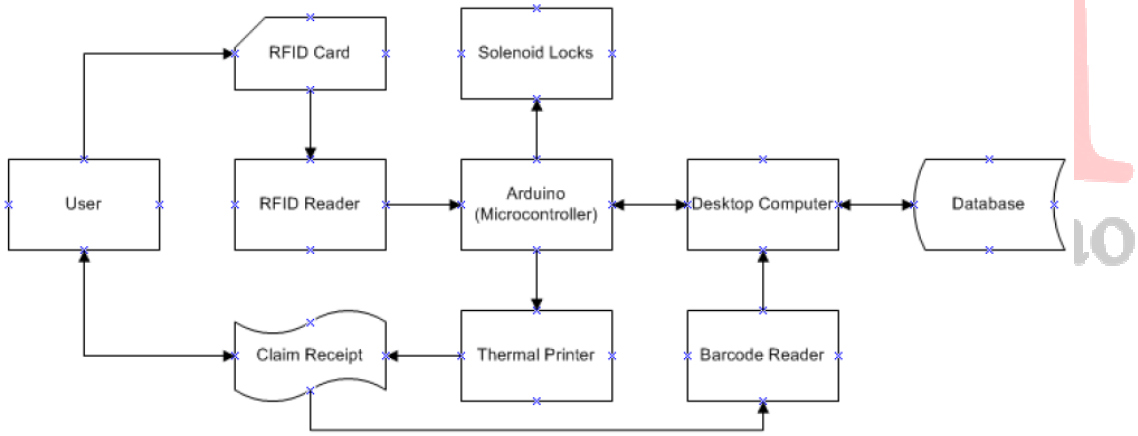

Fig. 2 Self-service Baggage Counter Block Diagram

The RFID cards are used as personal identification for the user which will be read by the RFID scanner. This research used a passive RFID with a frequency of 13.56MHz. The Arduino microcontroller interprets the data read by the RFID reader and sends the data to a software in the desktop computer. A receipt will be printed by the thermal printer which contains the transaction time and date, user, assigned storage and the generated security key in a form of a barcode. The security key will be scanned using the barcode reader upon claiming.

Furthermore, software is developed to handle the interaction between the user and the system. The software also sends signal to the Arduino microcontroller which takes control on locking or unlocking of the specified storage shelf using solenoid lock.

C. Process flow / System flowchart

The process flow is shown in Figure 3. When the user wants to deposit or claim a baggage, a welcome screen will display two available options for the user to select from: deposit and claim. The system must first detect the user ID with a concealed RFID tag to be able to perform the claim or deposit transactions. The acquired ID number will be used to get the name of the user from a database. If a user is not registered, the user must register as readily provided by the system.

Deposit transaction

When the deposit option is chosen, the software will check if there are available storages. Available baggage storages will be displayed. Once verified, the chosen cabinet will be unlocked. The system will then print a security key using a key algorithm in a form of a linear barcode. After the deposit process, the information about the user will be logged indicating the storage number, name of the user, ID number, security key and time of deposit. Time allotted for the deposit screen is 30 seconds which includes the printing time.

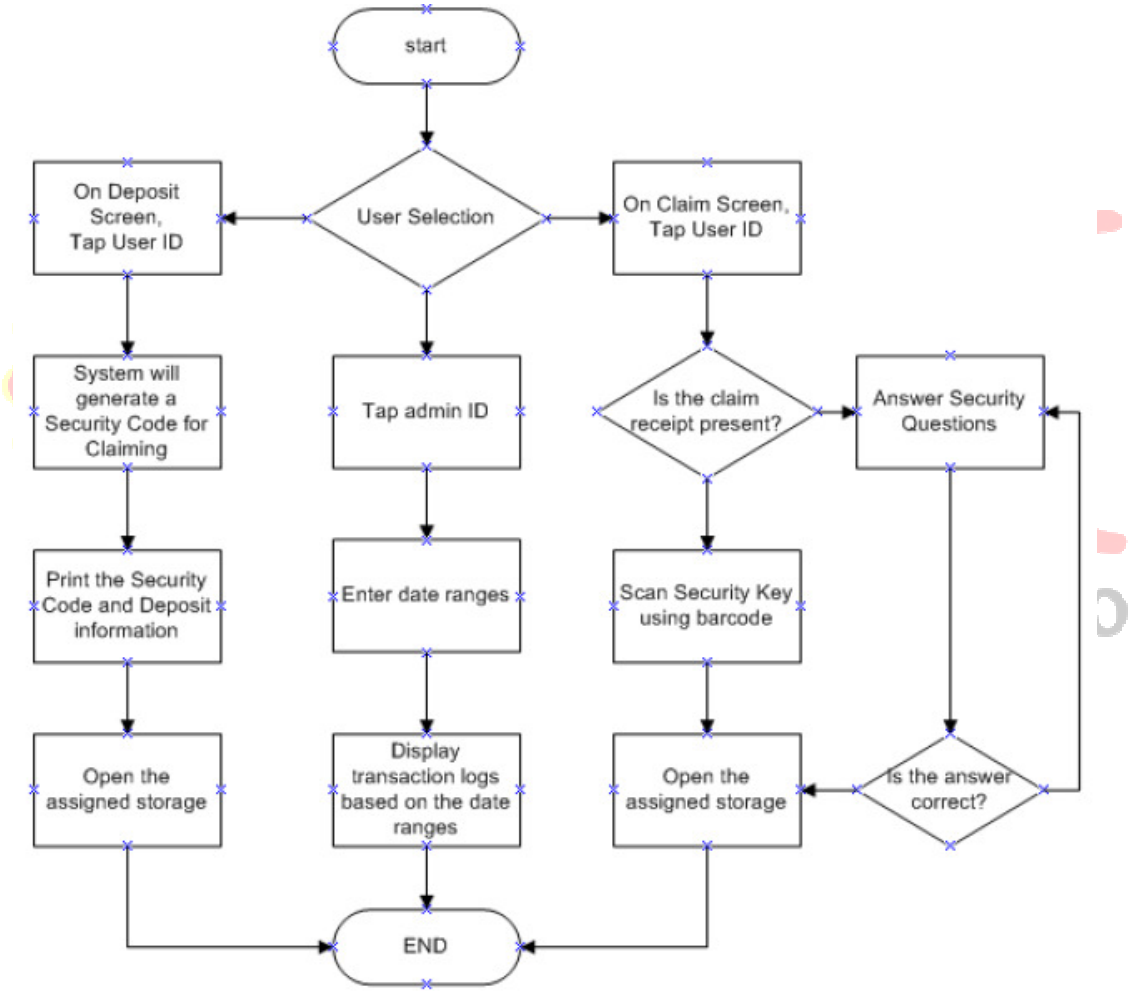

Fig. 3 Self-service baggage counter system flow

Claim transaction

When the claim option is chosen, the user will let his security key be scanned by the reader. The system will then check if it matches with the stored security for the given storage. If not, it won't be accepted by the system. After claiming the baggage, the status of the user will be updated for his/her time of claiming. The screen will return to selection of choices ready to be used by the next user after 20 seconds.

Activity/Usage Log

To view the system's usage, a login screen will be displayed and ask the user to scan again his/her ID to be detected by the RFID reader verifying that the user is authorized to view the system's usage logs. If login is successful, the admin-user can now view the activity or usage log of the system.

D. Procedures

Planning & Research. The proponents gathered enough data to support the research. The data collected were in relation to the development of the system and how the system will work as expected. The data were then processed and used to support the objectives of the study.

Analysis and Design. The gathered data were analyzed and used to produce multiple designs. These designs have then undergone a trade-off analysis. The result of the trade-off analysis is very significant to determine the best design to implement. Engineering standards were also identified to serve as a guide in system development.

System Prototype. The proponents produced a system prototype from the results of the analysis and design. The prototype was tested and verified if it performed the necessary functions of the system.

Implementation. This phase is where the proponents made their actual coding of the software.

Software Integration. The proponents interfaced the software with the hardware and made a series of tests for all the possible library baggage transactions.

Overall Testing. The proponents have tested the system. Functionality testing and user acceptability testing have been implemented to ensure the functionality and quality of the system.

System Deployment. This is the stage where the system is ready to do its task. This means that the system is ready for use.

System Maintenance. It is where the proponents perform regular updating and debugging of the system.

RESULTS AND DISCUSSION

A. Actual device

The actual device, as shown in Figure 4, is comprised of fifteen (15) storage cabinets with solenoid locks, a kiosk, computer unit, monitor, mouse, keyboard, barcode scanner, RFID reader and thermal printer. The kiosk and storages are mainly made of wood. Inside the kiosk is a compartment which holds the computer unit, Arduino modules and hardware circuitry.

Fig. 4 Self-service Baggage Counter Actual Device

B. Baggage Claim Security Key Algorithm

Figure 5 shows the flowchart of generating a security key used for claiming the deposited baggage. The algorithm utilized base-36 as its radix.

The generation of password after depositing provides optimum security when the user claims his/her baggage. The password is auto-generated by manipulating the user ID number, assigned storage and transaction number. A sample result of an alphanumeric character generated by the system is shown in Table 1.

For example, the following information is provided:
ID no.: 39240110
Storage no.: 01A16 = 2610
Transaction no.: 3610

Table 1. Baggage claim security key process

Step	Procedure	Output
1	Add the ID no. and Transaction no. and the result will be the Base ID	$392401_{10} + 36_{10} = \mathbf{392437_{10}}$
2	Multiply Base ID with the storage number in decimal. the result will be the Product ID	$392437_{10} * 26_{10} = \mathbf{10\ 203\ 362_{10}}$
3	Add the Product ID to the Base ID. Convert the result to base-36.	$10\ 203\ 362_{10} + 392437_{10} = 10\ 595\ 799_{10} = \mathbf{6B3RR_{36}}$
4	Divide base ID with storage no. in decimal. The result will be the **Quotient ID**	$392437_{10} / 26_{10} = 15093.7_{10}$ or $\mathbf{15\ 094_{10}}$
5	Subtract base ID and Quotient ID	$392437_{10} - 15094_{10} = 377\ 343_{10} = \mathbf{83BR_{36}}$
6	Combine the 1st and 2nd base-36 values	$\mathbf{6B3RR83BR6_{36}}$

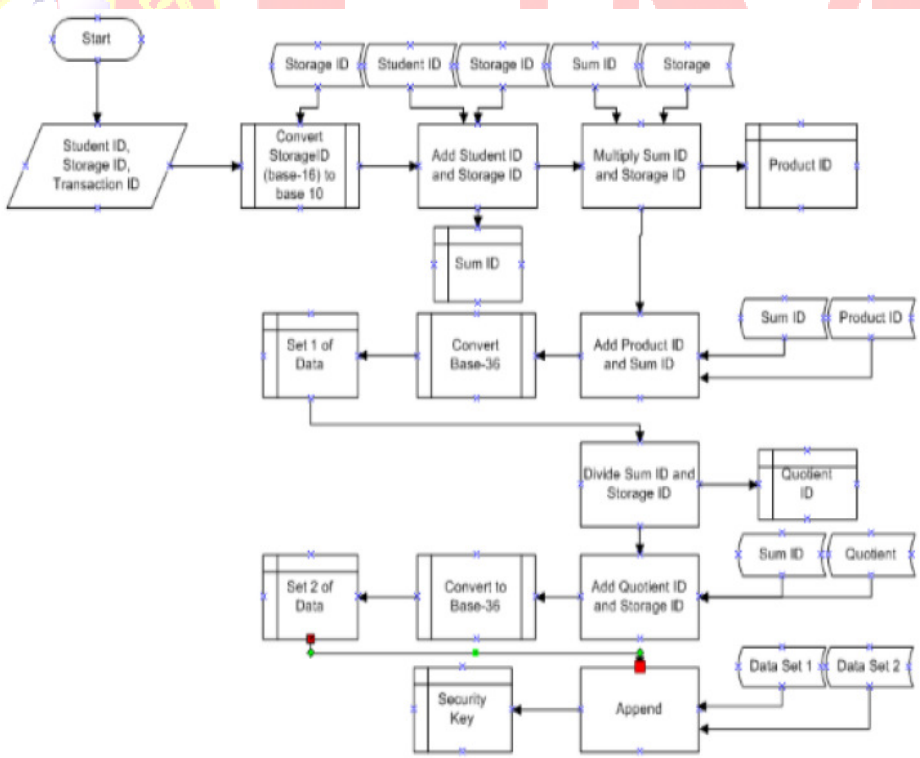

Fig. 5 Baggage claim security key algorithm

The thermal printer Model CSN-A2-T limits the height of the barcode so the researchers had taken only the first five (5) alphanumeric characters from the generated security code. Thus, the security key that will be given to the users will be 6B3RR.

C. User Acceptability of the System

Table 2 shows the result of the user acceptability test. Thirty (30) respondents were picked randomly from faculty and students who took part in the pilot testing.

Table 2. User acceptability test

Question No.	1	2	3	4	5	Mean	Result
1	0	0	0	3	27	4.9	Very Acceptable
2	0	0	1	4	25	4.8	Very Acceptable
3	0	0	3	2	25	4.733	Very Acceptable
4	0	0	0	6	24	4.8	Very Acceptable
5	0	0	0	6	24	4.8	Very Acceptable
Weighted Mean						**4.8066**	**Very Acceptable**

The user acceptability survey got a weighted mean of 4.81 which means that the respondents believed that the system is VERY ACCEPTABLE.

D. Average time on claim/Deposit transactions

The average time for depositing during the pilot testing, as shown in Table 3, is 34.24 seconds. The average time for claiming, as shown in Table 4, is 36.42 seconds. In case the user lost his claiming stab, he shall click the "Lost Key" button. The system will ask the user to answer a specific security question that was pre-determined during registration stage of the user.

Table 3. Average deposit time

Trial Number	RFID Reader	Thermal Printer	System Response Time	Remarks
1	✓	✓	28.2 seconds	Successful
2	✓	✓	29.52 seconds	Successful

Table 4. Average claim time

Trial Number	RFID Reader	Barcode Reader	System Response Time	Remarks
1	✓	✓	30.7 seconds	Successful
2	✓	✓	45.19 seconds	Successful Faded Barcode
3	✓	✓	29.65 seconds	Successful
4	✓	✓	33.31 seconds	Successful
5	✓	✓	59.40 seconds	Successful Faded Barcode
6	✓	✓	29.61 seconds	Successful
7	✓	✓	29.28 seconds	Successful
8	✓	✓	35.45 seconds	Successful
9	✓	✓	29.83 seconds	Successful
10	✓	✓	35.45 seconds	Successful
11	✓	✓	29.83 seconds	Successful
12	✓	✓	38.35 seconds	Successful
13	✓	✓	37.31 seconds	Successful
14	✓	✓	41.54 seconds	Successful
15	✓	✓	35.28 seconds	Successful
Average Response Time			36.42 seconds	Successful

CONCLUSION

The researchers were able to develop a self-service baggage counter system for the Learning and Information Center of the University of Mindanao. The features of the system covered the user registration, claiming and depositing transactions, issuance of security key code, recording, viewing and printing of activity log. The researchers were able to design an algorithm for generating password as the security key for claiming the baggage. The base-36 security key algorithm was made possible manipulating the user ID, transaction number, and storage number of the current transaction resulting in an alphanumeric password. Testing of hardware components, such as, thermal printer, barcode scanner, RFID reader and locking mechanism circuitries are also done successfully. User acceptance testing is also conducted which resulted to be very acceptable to the users.

REFERENCES

Aydin, K., Yildirim, S. (2012). Case study about rfid system in library services. *International Journal of Synergy and Research*, 1(2), 91-102

Das, D., Lanjewar, U. A., & Sharma, S. J. (2013). Design an algorithm for data encryption and decryption using pentaoctagesimal sns. *International journal of computer trends & technology*, 1(6), 84-88.

Kumar, A., & Nigam, A. K. (2014). A comparative analysis of uses of 1-d and 2-d barcodes. *International Journal of Advanced Research in Computer Science*, 5(6).

Laheurte, J., Ripoll, C., Paret, D., & Loussert, C. (2014). *UHF RFID technologies for identification and traceability (pp. 156-157)*. London: ISTE Ltd.

Sing, J., Brar, N., & Fong, C. (2013). The state of rfid applications in libraries. *Information Technology and Libraries, 25*(1), 24-32.